Differential threshold in colour perception

a consequence of retinal processing and photoreceptor non-linearities

D.Alleysson & J.Hérault (alleysso,herault@tirf.inpg.fr)

LIS-INPG
Laboratoire des images et des signaux
46, Ave. Félix Viallet

F-38031 Grenoble Cedex France
http://www-tirf.inpg.fr/

Description of measures

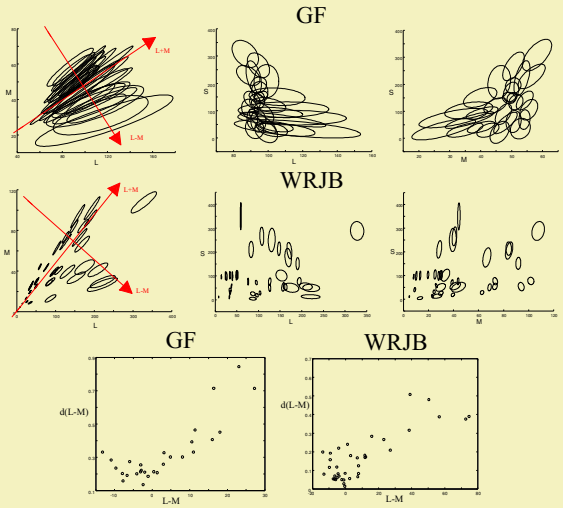

6 observers : PGN (2D), WRJB, DLM , GF, AR, GW (constant luminosity)

D.L. MacAdam JOSA 1942
W.R.J. Brown JOSA 1949
G. Wyszecki JOSA 1971

We convert original data from the CIE XYZ space to the LMS space

In LMS, ellipsoids correspond to the differential threshold of each photoreceptor

In the LM projection, ellipsoids are oriented in L+M and L-M direction. In the LS or MS projection, ellipsoid are oriented in fan-shaped.

According to Y. LeGrand, the variation of chrominance follows a "V" shape. This characteristic appears for observer PGN, GF,AR, GW but not for DLM and WRJB

This property also exists for the 2 last cases, measures made do not emphasised it.

Y. LeGrand Rev.Opt. 1949 Translated by K. Knoblauch CRA 1994.
A.L Nagy JOSA 1987

Biological model

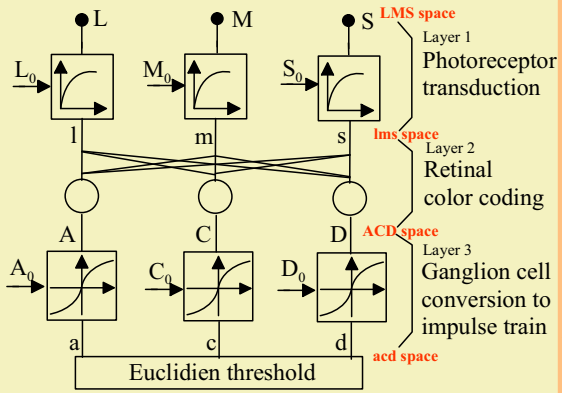

The Model is composed of two non linear layers and one linear layer.

In the first layer, photoreceptor transduction follows the Naka-Rushton law x=X/(X+X0) where X0 represents the adaptation state of the photoreceptor.

This law is non-linear, and the non linearity is modulated by the adaptation state.

The variation of light falling on the photo receptor is very important (2-3 log unit). However, neurons code only small variation. The adaptative non linear law compresses input signal to match the neuron capacity

In the second layer (linear) the transduction of photoreceptor is coded in luminance and color opposition (chrominance).

In the third layer, we model the ganglion cells conversion from bipolar cells analogue signal to the optic nerve pulse train.

The non linear ganglion conversion law is approximated by an arctan function which take into account ON&OFF pathways

Model application

A - Effect of the 2D non-linear (Layer 1) transformation on a circular stimulus

B - Principal direction of 2D non linearity (Layer 1)

C - Effect of second non-linearity on variation of chrominance (Layer 3)

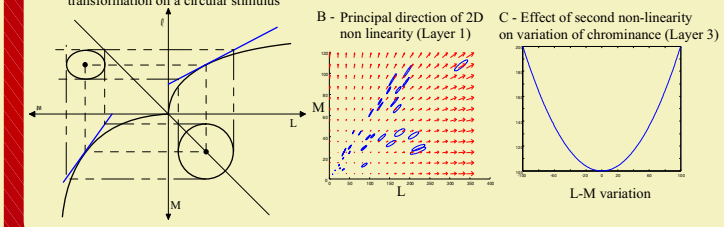

A - The first non linearity law transforms the direction and the size of a stimulus. For example a cirle becomes an ellipse.

B - Its orientation and size depends on the location of the considered stimulus. This last property allows to follow the principal direction of experimental data.

The effect of color coding (Layer 2) is to turn the space in order to match with chomatic direction.

C - The second non-linearity provides the "V" shaped function.

Parameter estimation

parameter convergence

ellipsoid in acd space

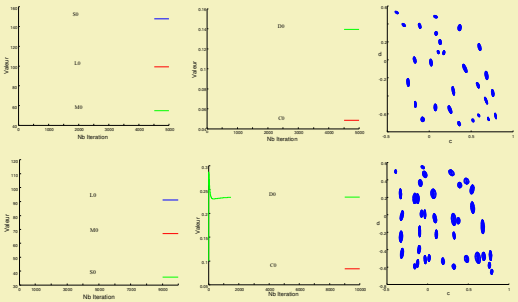

Ellipsoid parameters

$$X^T G_i X = 1 \quad (1)$$

Model transformation

$$H_i = N_i^{-1} P^{-1} M_i^{-1} G_i M_i^{-1} P^{-1} N_i^{-1} \quad (2)$$

cost function

$$J = (H_i - I)^T (H_i - I) \quad (3)$$

Parameter upgrade

$$\frac{\partial J}{\partial L_0} = 1$$

Parameters of ellipsoid in LMS space may be written in matrix form (1).

Once, the three layers model may be approximate by matrix transformation (2).

We use a classical algorithm (gradient descent) to approximate the ideal parameters

The cost function is the difference between ellipsoid in acd space and sphere.

The parameters are computed in order to minimise the cost function.

Result and conclusion

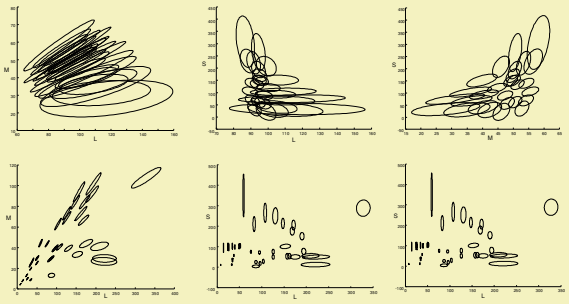

Size and orientation of the ellipsoids are almost identical in the acd space.

To estimate the result, we replace all the ellipsoids in the acd space by the average ellipsoid and then compute the corresponding ellipsoids in the LMS space.

We observed that only one ellipsoid type (the average) gives rise to a large variety in size and orientation in LMS space, according to the experimental data.

The model perfectly matches the "V" shape curve and confirms that a two non linear layers architecture explains low level color vision.

Furthermore, the second layer informs us about the opponent color coding.